EBIBW24 - BOTTLE WELL

ITEM ##### - SCALE: #" = 1'-0"

1 EACH

MATERIALS & FINISHES

(WHERE APPLICABLE)

- WORKING SURFACE & TUB(S): 16GA 304 SERIES S/S, #4 FINISH
- PERFORATED INSERT: 18GA 304 SERIES S/S, #4 FINISH
- UNDERSTRUCTURE: 16GA GALVANIZED
- CABINET BODY & FLOOR SHELF: 18GA S/S, #4 FINISH
- LEGS: ϕ1-5/8" 16GA S/S TUBING & ADJ. BULLET FEET
- DRAIN(S): BY EUROBAR
  - ϕ1" BRASS DRAIN, 1" NPT, 3¼" TALL - QTY (1)
- MOUNTING CLIPS: 1 EA PER 24" OF BACKSPLASH

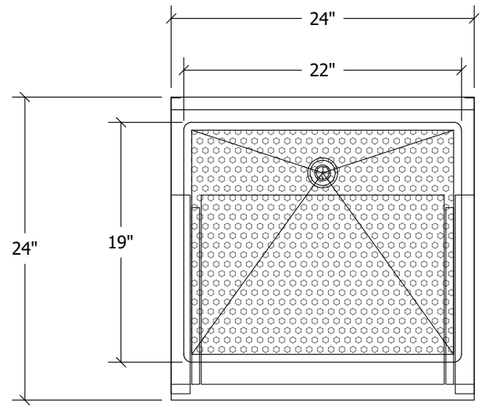

PLAN VIEW

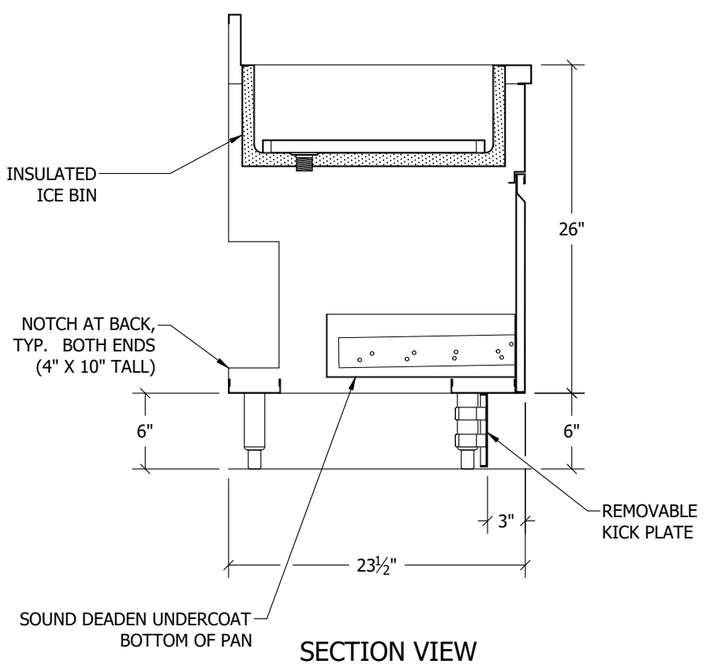

SECTION VIEW

Scale: #"= 1'-0"

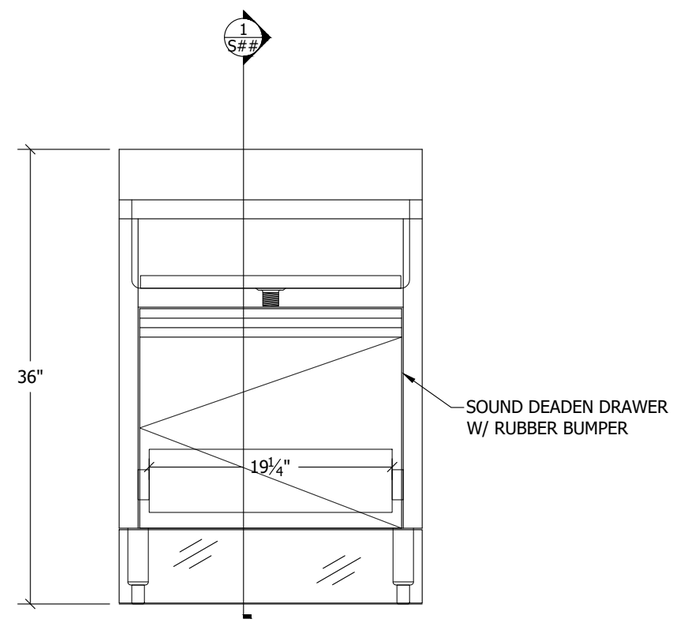

FRONT VIEW

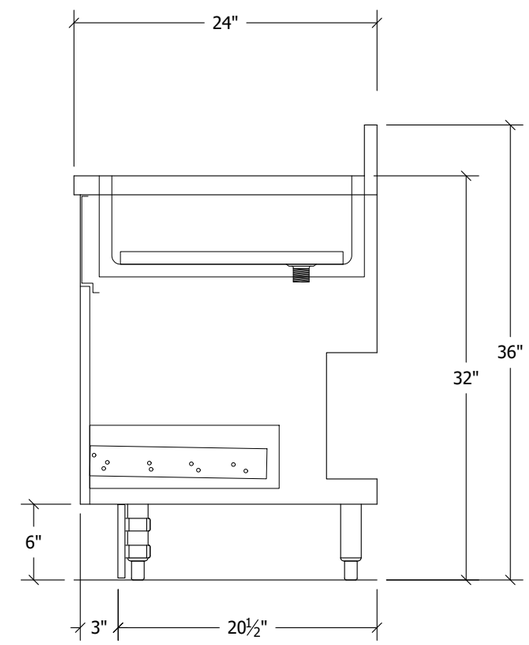

SIDE VIEW

..\Revit Families (Current)\Eurobar logo.png

CUSTOMER:

ITEM NO: EBIBW24

EUROBAR

MAIN SCALE: 1

MASTER DRAWING

SECTION SCALE: 1

11x17 PAGE FORMAT

REVISIONS

Proj. Mgr:	
Drawn By:	
Drawn Date:	

8/2/23