EBSC12 - SPICE CADDY

ITEM EBSC12 - SCALE: 1-1/2" = 1'-0"

MATERIALS & FINISHES

(WHERE APPLICABLE)

- 18GA 304 SERIES S/S, #4 FINISH

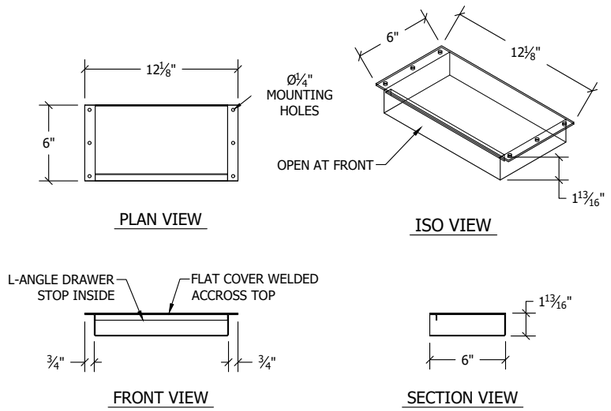

MOUNTING PAN DETAIL

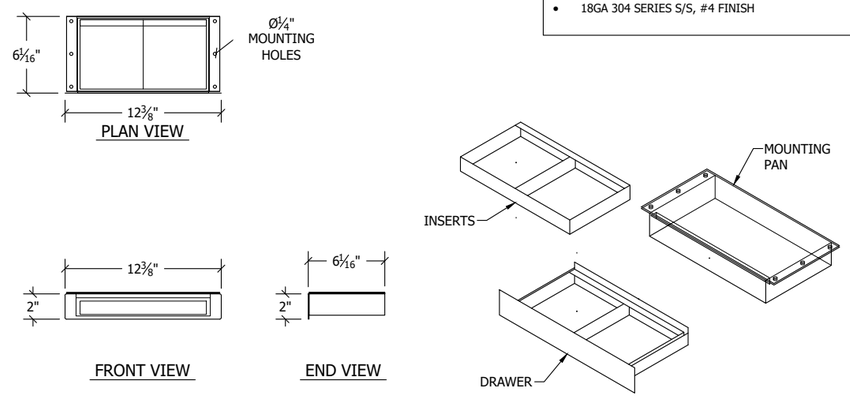

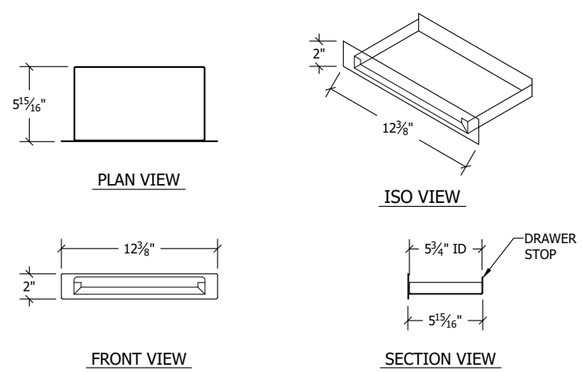

DRAWER DETAIL

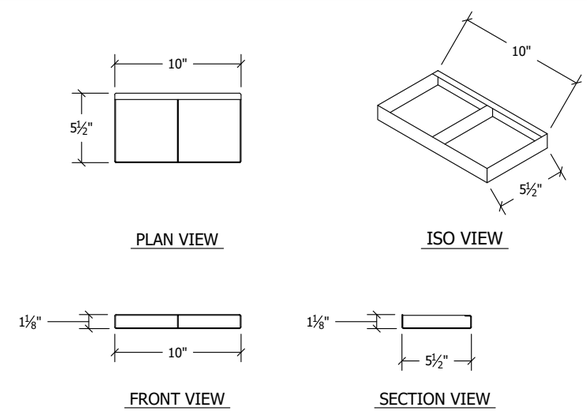

INSERT DETAIL

QTY. 2 EA

CUSTOMER:

..\Revit Families (Current)\Eurobar logo.png

EUROBAR

MASTER DRAWING

11x17 PAGE FORMAT

ITEM NO: EBSC12

MAIN SCALE: 1-1/2

SECTION SCALE: 1-1/2

3

REVISIONS

Proj. Mgr:	
Drawn By:	
Drawn Date:	

8/2/23